M&J F140

FineShredder from M&J Recycling

M&J RECYCLING

Specification

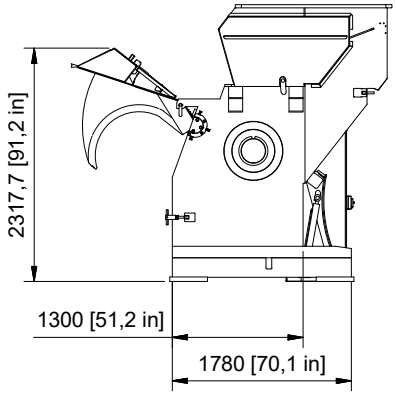

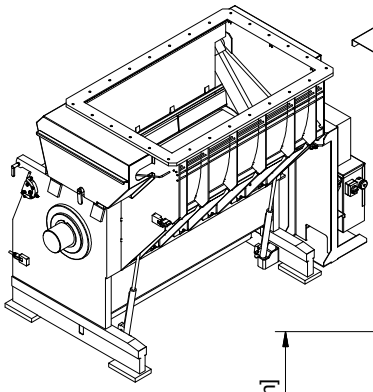

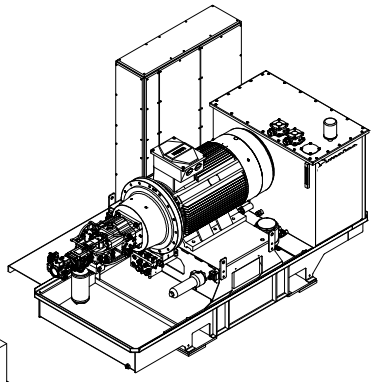

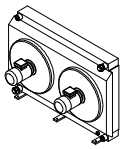

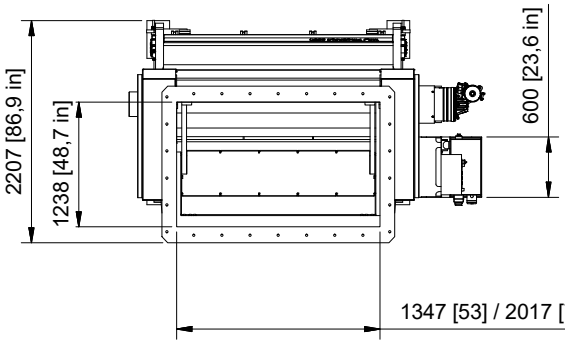

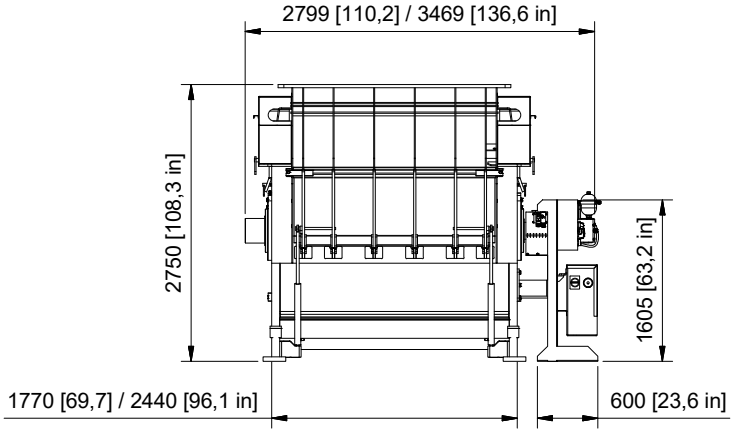

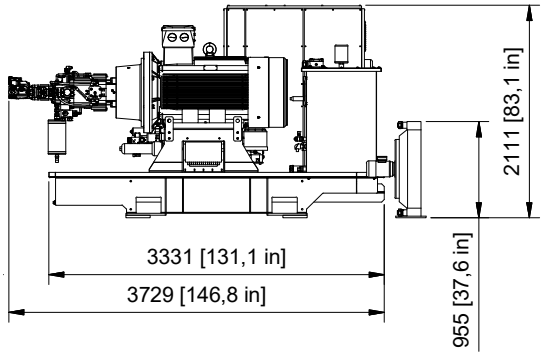

Specification		
Overall dimensions without hopper (LxWxH)	mm	2207 x 2799 x 2750
Weight total	ton	14.0
Standard colour	RAL	7011, 9002
Assembly of knives on the knife holder		Bolted

Knives info		
Number pr shaft	pcs	72/144
WSC 40	mm	40 x 40 x 12

Capacity per hour – Input material: <300 mm - presorted - continues feeding. Guide values only.

Up to 11 ton (90% below 50 mm)

M&J F140

We aim to make your everyday life hassle-free.
The M&J F140 is so strongly designed that it requires minimal maintenance

Low energy consumption, minimal daily servicing, and easy maintenance. It's all good news for your operating budget with the M&J F-series for alternative fuel production like RDF/SRF

The M&J F140 is the epitome of a well-thought-out design. The focal point is high reliability and fast and easy service, so that downtime is limited to an absolute minimum

Minimal maintenance. Unique cutting system. Less heat generation. Expect the highest uptime on the market

Thanks to the leading cutting technology of the M&J F140, you get homogeneous output with minimal heat generation and limited fine particles

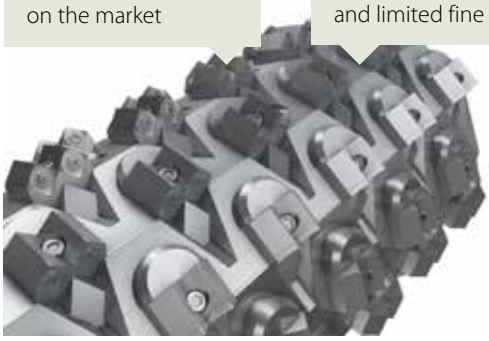

At the heart of the M&J F140 is the unique and highly efficient cutting system. It does all the work without you having to do any daily adjustment

Different screen size options allow for different grain sizes – all the way down to Ø10 mm. The M&J F140 takes flexibility and versatility to a new level

Shafts		
Number of shafts	pcs	1
Length rotor	mm	1350
Diameter rotor	mm	665
Number of knives	pcs	72/144
Standard rotating speed	rpm	100-280
Power pack		
Overall dimensions (LxWxH)	mm	3331 x 1470 x 1488
Weight total (incl oil and main cabinet)	ton	3.8
Service area minimum recommended	mm	1000
Cooling capacity	kW	60
Effect	kW	200
Drive principle		Hydrostatic transmission

RECYCLING

FOR MORE INFORMATION, CONTACT YOUR LOCAL M&J REPRESENTATIVE, OR CONTACT YOUR DEALER DIRECTLY.

MJRECYCLING.COM

M & J | Vejlevej 5 | DK-8700 Horsens | Tel: +45 7626 6400 | sales@mjrecycling.com

The information in this document is provided for guidance only and as is without warranty of any kind, either express or implied, including but not limited to the implied warranties of merchantability, fitness for a particular purpose or non-infringement. Information in this document may include information not appropriate to specific configurations, or information which has not been updated. M&J Recycling has the right to make changes in the document without notice. Not all products or services are available in all countries. In no event shall M&J Recycling be liable for any damages. We reserve the right to make changes and improvements without notice.
"M&J F140, UK". M&J Recycling, september 2021.